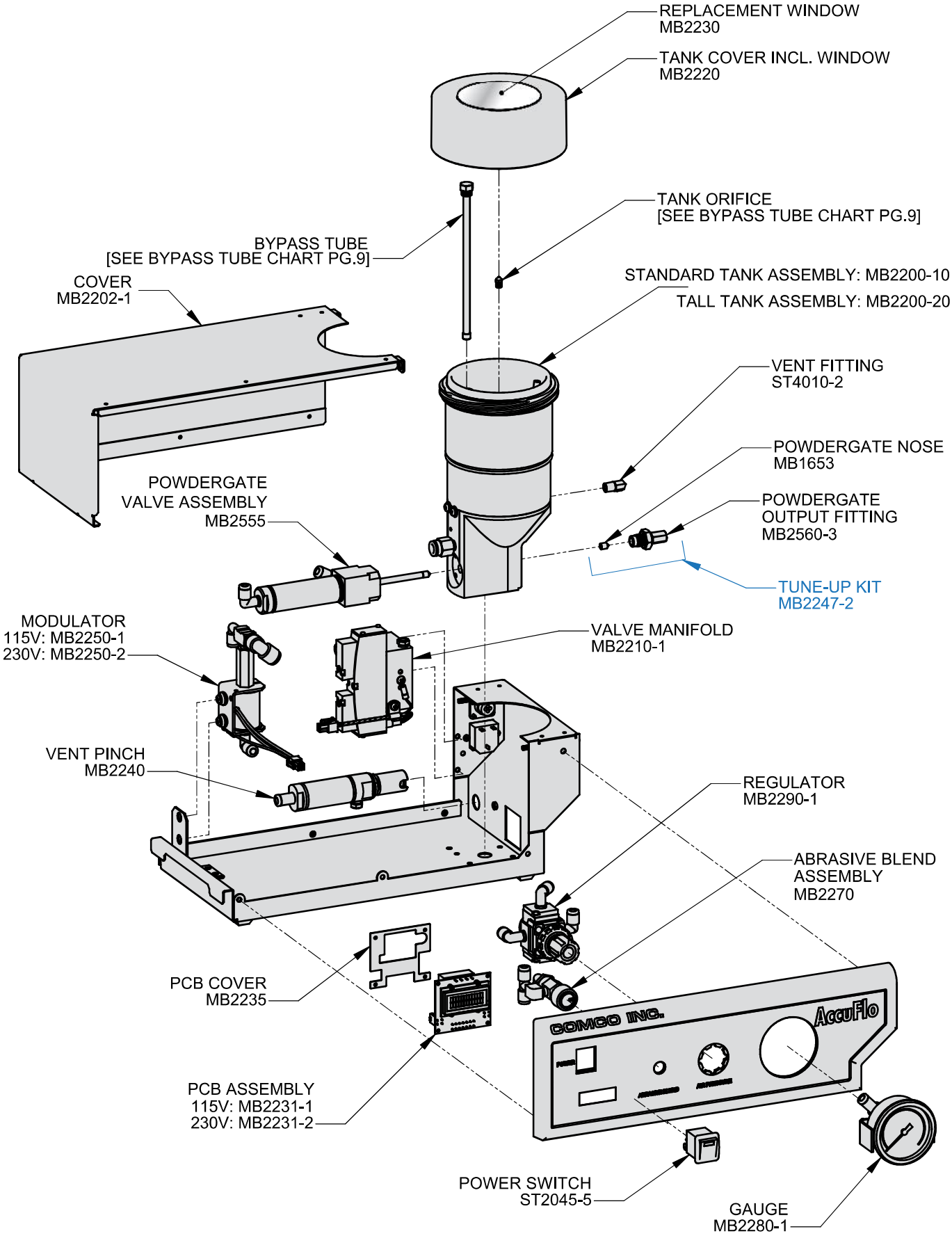AF10 Components